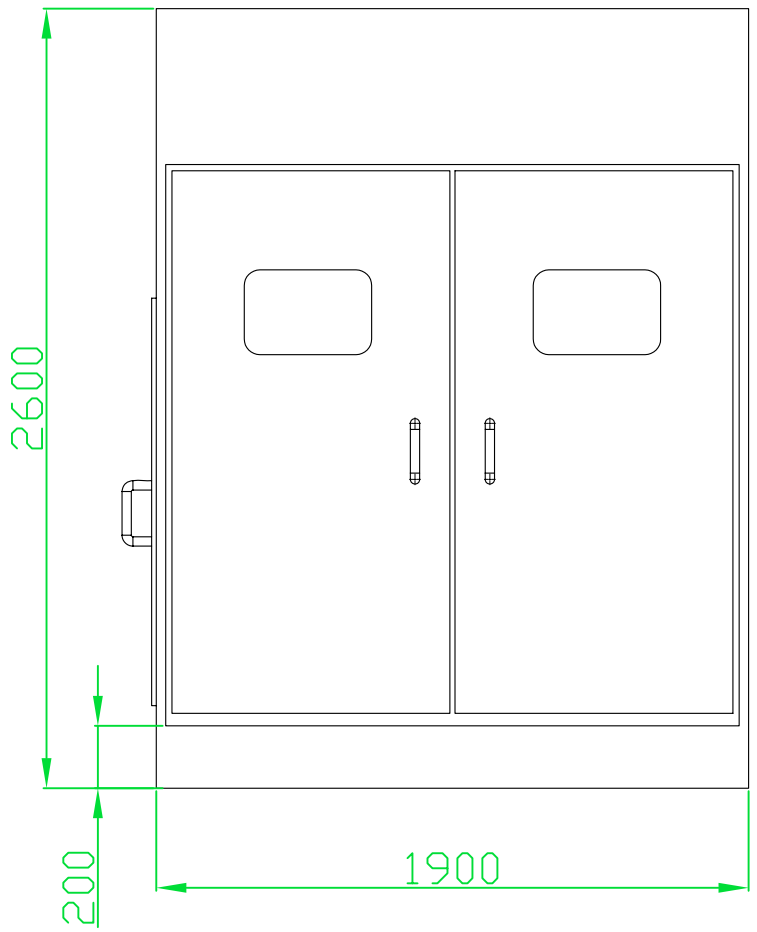

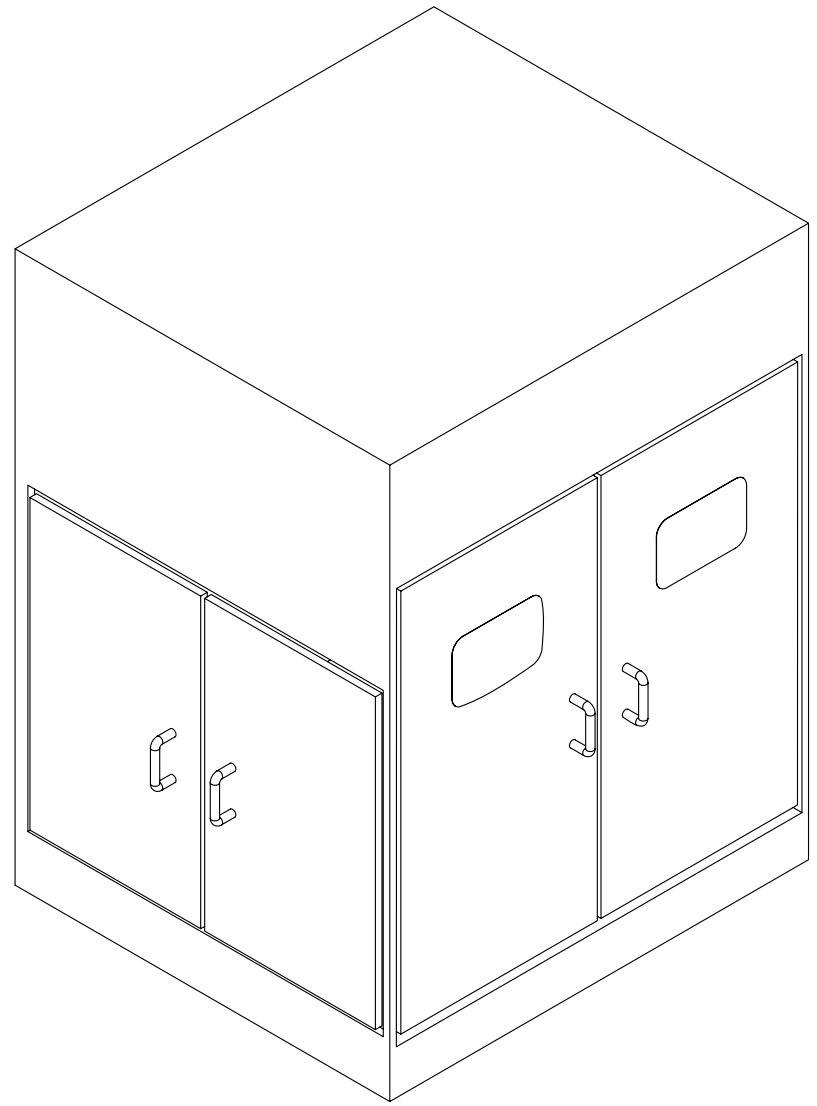

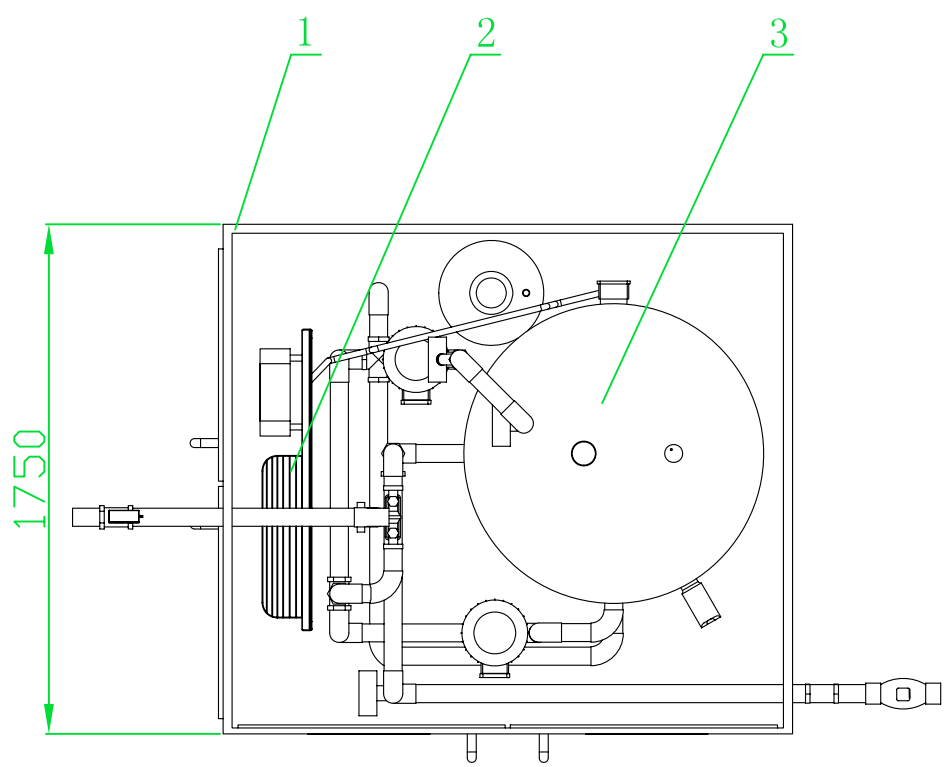

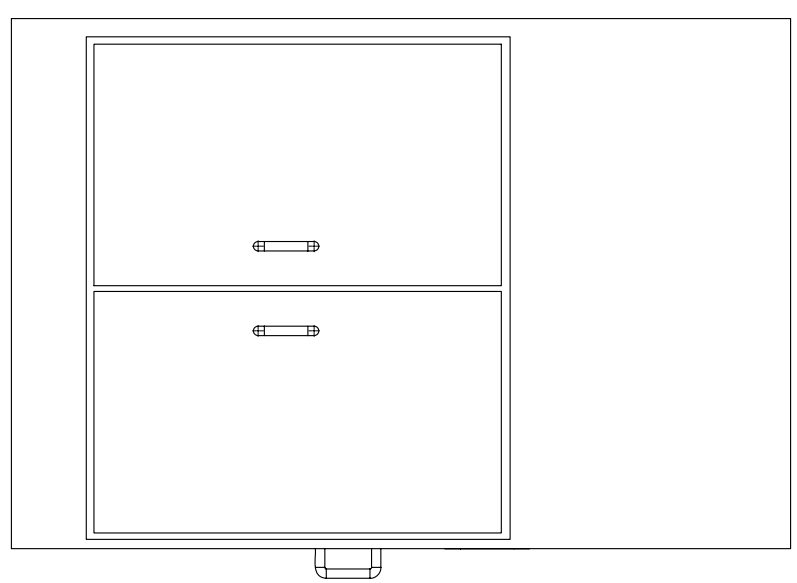

3	EYE WASH TEMPERED WATER SYETEM	1	specification refer the picture of eye wash tempered water system
2	Space heater	1	
1	shower station	1	
number	name	amount	Note

OUTDOOR TEMPERED WATER EMER SYSTEM BOOSTER